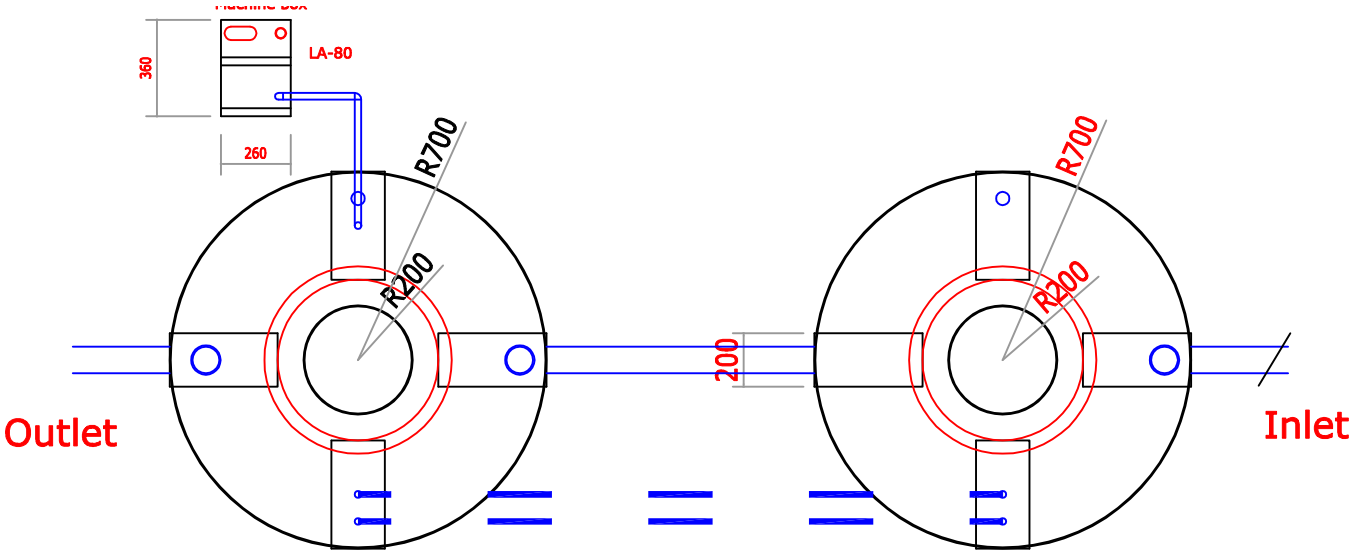

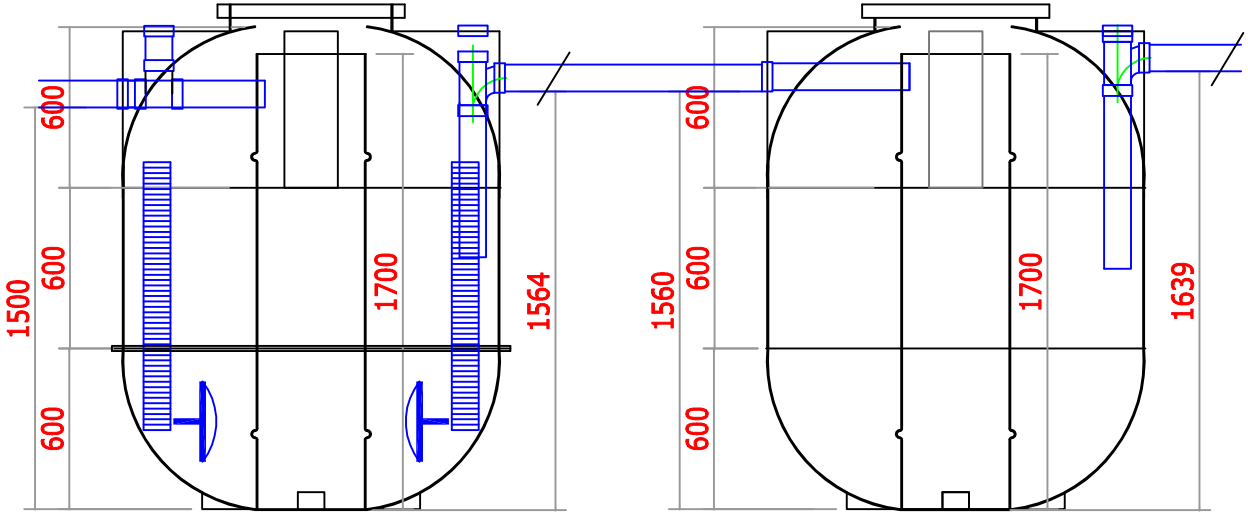

Treatment Tank

Primary Tank

Treatment BSTP-8

Primary BSTP-8

NOTES / CATATAN :

Legend :

REVISION

NO.	DESCRIPTION	DATE	CHECK

PROJECT / PROYEK :

Tank detail
BSTP-8

OWNER / PEMILIK :

AMANAID

CONSULTANT / KONSULTAN :

PT. AMANAID

For people that care

DRAWING TITLE / JUDUL GAMBAR :

BSTP-8

Designed by : PAN	No. Project : Project No. :
Drawn by : PAN	No. Drawing : Drawing No. :
Checked by :	No. File : File No. :
Approved by :	Scale : Scale :
Date :	Ref. Drawing : Revision :

THESE DRAWINGS ARE AN INSTRUMENT OF SERVICE AND ARE THE PROPERTY OF THE CREATOR. ANY USE OF THE DRAWINGS WITHOUT THE PRIOR, EXPRESS WRITTEN PERMISSION OF PT.AMANAID IS A VIOLATION OF COPYRIGHT AND WILL BE LIABLE TO PROSECUTION
DO NOT SCALE FROM DRAWINGS USE ONLY GIVEN DIMENSIONS
ALL DIMENSIONS ARE IN MILLIMETRES UNLESS OTHERWISE NOTED

FOR INFORMATION	/ / 2009	FOR APROVAL	/ / 2009	FOR PERMIT	/ / 2009	FOR TENDER	/ / 2009	FOR CONSTRUCTION	/ / 2009