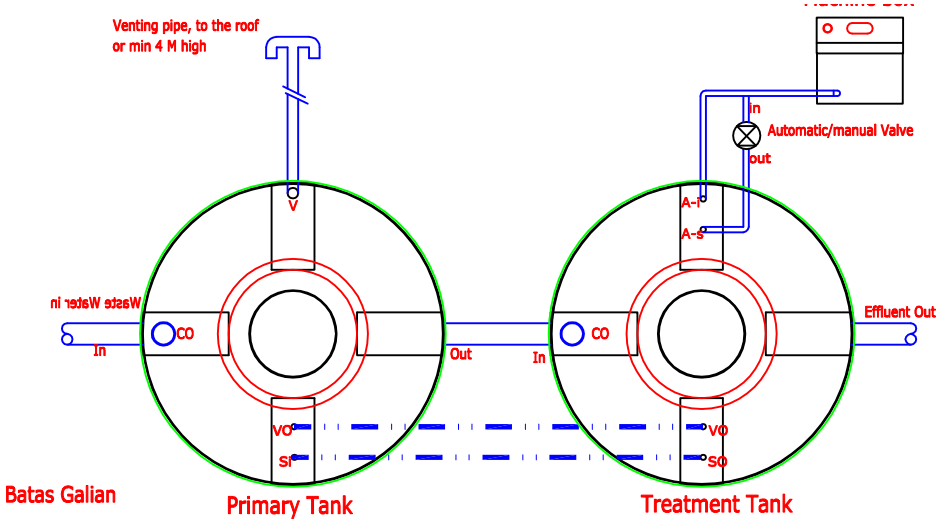

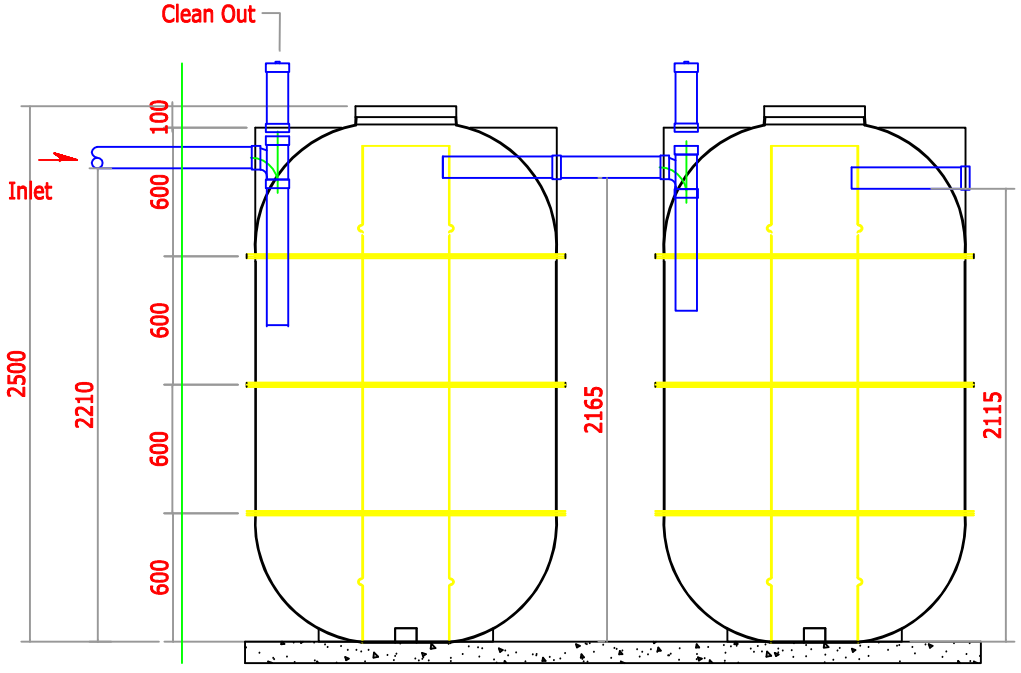

Skala = 1:25

NOTES / CATATAN :

Legend :

REVISION

NO.	DESCRIPTION	DATE	CHECK

PROJECT / PROYEK :

Tank detail
BSTP-15

OWNER / PEMILIK :

AMANAID

CONSULTANT / KONSULTAN :

PT. AMANAID

DRAWING TITLE / JUDUL GAMBAR :

BSTP-15
Tanpa Pembebanan

Designed by :	PAN	Dr. Project : Project No. :	
Drawn by :	PAN	Dr. Number: Drawing No.:	
Checked by :		Dr. File : File No. :	
Approved by :		Scale : Scale :	
Date :		Ref. Drawing :	Revision :

THESE DRAWINGS ARE AN INSTRUMENT OF SERVICE AND ARE THE PROPERTY OF THE CREATOR. ANY USE OF THE DRAWINGS WITHOUT THE PRIOR, EXPRESS WRITTEN PERMISSION OF PT.AMANAID IS A VIOLATION OF COPYRIGHT AND WILL BE LIABLE TO PROSECUTION
DO NOT SCALE FROM DRAWINGS USE ONLY GIVEN DIMENSIONS
ALL DIMENSIONS ARE IN MILLIMETRES UNLESS OTHERWISE NOTED

FOR INFORMATION	/ / 2009	FOR APROVAL	/ / 2009	FOR PERMIT	/ / 2009	FOR TENDER	/ / 2009	FOR CONSTRUCTION	/ / 2009